KIDDE™ COMMERCIAL

ZX832-3B

Addressable Multisensor (Optica/heat)



ZX832-3B

Addressable Multisensor (Optica/heat)

Tekniska specifikationer

General

Addressing method	Interruptores DIP

Electrical

Power supply type	Alimentado por bucle

Detection

Monitoring	Alarm threshold, Continuously self-checking, Fault

Physical

Colour	Negro (RAL 9005)
Mounting type	Montaje sobre base, Loftmontering, Forsænket montering
Material (body)	Støbt ABS

Environmental

Vandal proof	No
Environment	Indendør

Regulatory

Compliancy	CE, REACH, RoHS 3, WEEE
Certification	CPR

Kompatibla produkter

Kategori	Referens	Beskrivning
Detection device	11510-ZT	ZPL1-1 ADD.LABEL 1001-1127
Detection device	11520	Zpl1-2 Add.Label 2001-2127
Detection device	11530-ZT	ZPL1-3 ADD.LABEL 3001-3127
Detection device	11540-ZT	ZPL1-4 ADD.LABEL 4001-4127
Detection device	84301/BLK	ZP7-SB1 Surface Mount Detector Base (Black)
Notification device	122301	Z-RL3 Remote LED w/ "Fire" Text, Square
Notification device	Z-RL4	Remote LED Indicator - Square

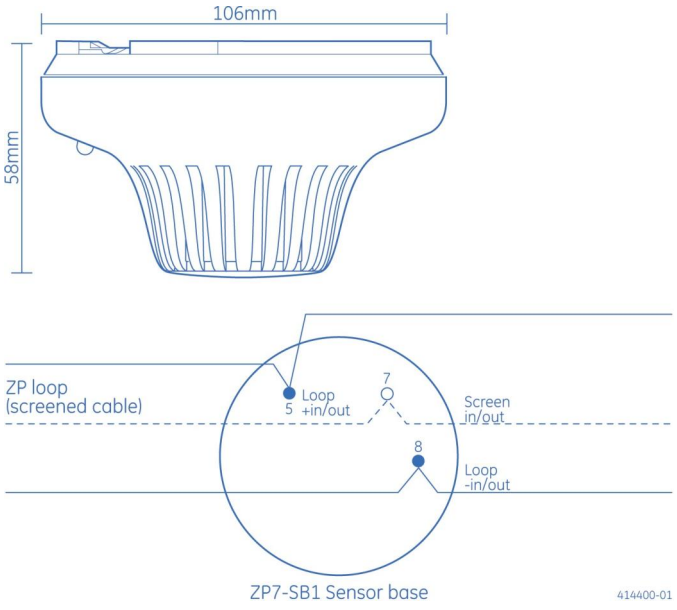

Kidde Global Solutions förbehåller sig rätten att ändra produktspecifikationer utan föregående meddelande. För de senaste produktspecifikationerna, besök se.firesecurityproducts.com online eller kontakta din försäljningsrepresentant.

Last updated on 12 November 2026 - 18:57