TVP-WMB

TruVision PTZ dome wall mount bracket

Product overview

The TVP-WMB is a wall mount bracket that can be used in combination with various TruVision PTZs. It can be combined with corner or pole mount accessories to facilitate various installation types.



Details

- Wall mount bracket
- Compatible with corner mount and pole mount accessories
- Safety lanyard included for secure PTZ installation
- Cable management within the bracket

TVP-WMB

TruVision PTZ dome wall mount bracket

Technical specifications

General

Bracket type	Câmara
Support type	PTZ Kamera
Bracket mounting part	Mounting bracket
Mount type	Vægmontering
Cable management	Yes

Physical

Physical dimensions	128 × 105 × 303.45 mm 5.04 × 4.13 × 11.95 in.
Net weight	945 g 2.08 lbs.

Compatible products

Category	Reference	Description
Brackets & Mounts	TVP-WM-CM	TruVision PTZ dome corner mount adapter

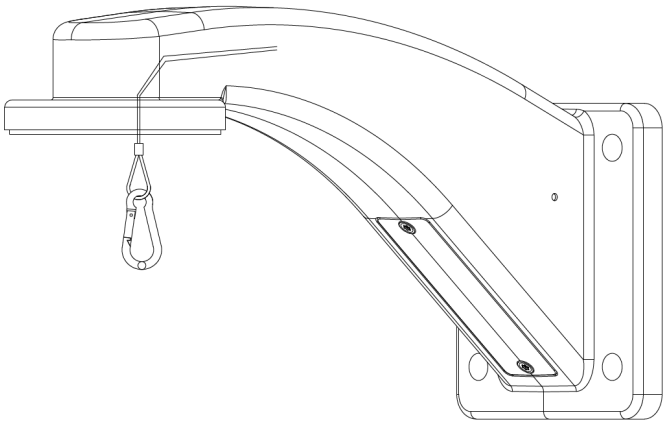

As a company of innovation, Kidde Global Solutions reserves the right to change product specifications without notice. For the latest product specifications, visit firesecurityproducts.com online or contact your sales representative.

Last updated on 27 August 2026 - 20:13