ZX832-3B

Ziton series addressable multisensor (Optica/heat)

General

The ZX832-3B is a BLACK, addressable optical/heat multi criteria detector for Ziton ZP7 compatible fire alarm systems. The ZX832 multisensor represents the next generation of fire detectors giving an earlier warning of fire or smoke with the ability to discriminate against false alarms. Fuzzy logic software using multi-criteria sensing form the basis of this advanced optical and heat detector.

The detector consists of integrated high sensitivity smoke and thermal sensors. The system combines the dynamic results of rates of change patterns and absolute levels of smoke and heat, to identify real fire criteria. Selectable software algorithms allow the response to be matched to each particular hazard. Algorithms can change for day/night operation.

Advanced self test facility

Units are of low-profile design and plug into either a surface, or a semi-recessed base. An automatic facility is provided to lock the detector into its base, requiring a special tool to remove. The ZX832 contains a built-in LED that illuminates when the detector is in an alarm condition.

An advanced self test facility excites the smoke chamber as though smoke were present, and fully tests the complete sensor as well as communication with the panel.

ZX832 detectors are suited to applications requiring the highest level of alarm integrity. Each detector can protect and area up to 100m², subject to room and ceiling design and local codes. If the detector is intended to be used in thermal-only mode at certain times, then maximum coverage area is 50m².

Automatic calibration

The ZX832 is a standard ZP7 addressable device that uses the ZP7 addressing system. Up to 127 devices may be connected to each ZP7 address loop. The system automatically compensates each sensor individually for calibration changes caused by dirt, temperature, humidity, voltage fluctuations and long term contamination.



Details

- Multi-criteria fire sensing
- Enhanced detection certainty
- False alarm discrimination
- Fuzzy logic algorithms
- User selectable algorithms
- Microprocessor based
- EN54:5 and 7 approved, and CPR certified

ZX832-3B

Ziton series addressable multisensor (Optica/heat)

Technical specifications

General

Status indication	Alarm LED (red)
Compatibility	Ziton addressable systems
Connectivity	2-wire loop
Addressing method	Interruptores DIP

Electrical

Power supply type	Alimentado por bucle
Operating voltage	19.5 to 20.5 V 4 V (Max. line loss)
Current consumption	600 µA (Quiescent) 700 µA (Alarm)

Detection

Detection principle	Smoke & Heat
Monitoring	Alarm threshold, Continuously self-checking, Fault
Sensitivity	Configurable
Coverage area	100 m² (Optical) 50 m² (Heat)

Output

Output quantity	1
Output type and rating	Remote indicator
Remote alarm output	Yes

Physical

Physical dimensions	106 x 58 mm
Net weight	105 g (excluding base)
Colour	Negro (RAL 9005)
Mounting type	Montaje sobre base, Loftmontering, Forsænket montering
Material (body)	Støbt ABS
Finish	Medium gloss

Environmental

Vandal proof	No
Operating temperature	-10 to +85ºC
Storage temperature	-20 to +70ºC
Relative humidity	20 to 95%
Environment	Indendør
IP rating	IP32

Regulatory

Compliancy	CE, REACH, RoHS 3, WEEE
Certification	CPR
Standards	EN54-5, EN54-7

Compatible products

Category	Reference	Description
Detection device	11510-ZT	ZPL1-1 address label 1001-1127
Detection device	11520	ZPL1-2 Add.Label 2001-2127
Detection device	11530-ZT	ZPL1-3 address label 3001-3127
Detection device	11540-ZT	ZPL1-4 address label 4001-4127
Detection device	84301/BLK	Ziton series ZP7-SB1 surface mount detector base
Notification device	122301	Z-RL3 Remote LED w/ "Fire" Text, Square
Notification device	Z-RL4	Remote LED Indicator - Square

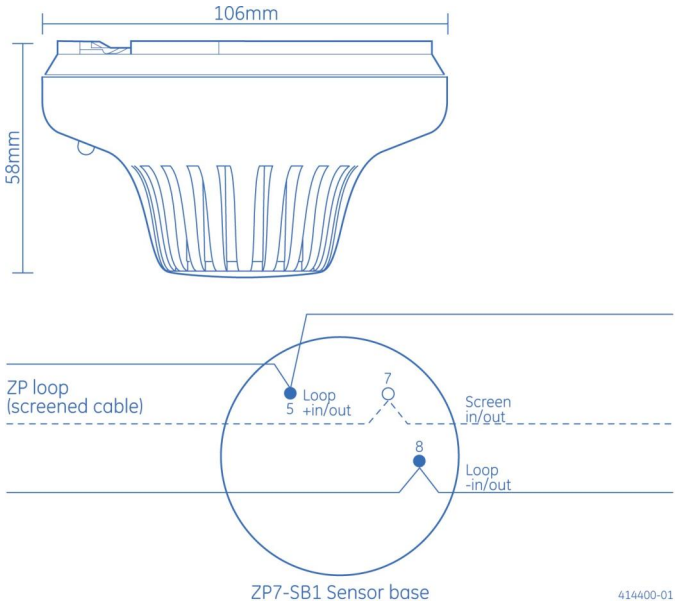

KIDDE COMMERCIAL

As a company of innovation, Kidde Global Solutions reserves the right to change product specifications without notice. For the latest product specifications, visit firesecurityproducts.com online or contact your sales representative.

Last updated on 16 October 2026 - 11:24