ZP755B-2P

Addressable Base Sounder (Polar White)



ZP755B-2P
Addressable Base Sounder (Polar White)

Specifiche tecniche

General

Addressing method	Mikroprzełączniki
Monitoring	Device removal, Device type, Open circuit, Short circuit, Sound output

Physical

Colour	Biel polarna
Mounting type	Montaż nawierzchniowy
Material	Støbt termoplast

Environmental

Environment	Indendør

Regulatory

Certification	EN54-3

Prodotti compatibili

Categoria	Riferimento	Descrizione
Detection device	ZP720-3P	Addressable heat detector
Detection device	ZP730-2P	ZP7 Series Addressable Optical Detector
Detection device	ZP732-2P	ZP7 Series Addressable Dual Detector (Optical & Heat) , Polar White
Detection device	ZX832-3P	ZP7 Series Addressable Multisensor (Optical/heat)
Notification device	70802	Red Cap for ZP755B Series Notification Devices
Notification device	SPB-2P	PLUG-IN BASE, PW
Notification device	ZP755-COV-P	ZP7 Series Detector Base Cover (Polar White)

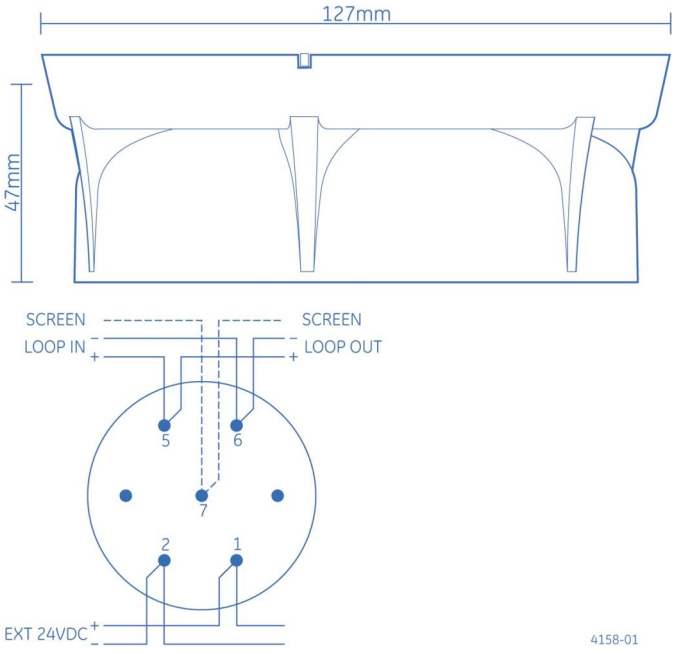

In quanto azienda in continua innovazione, Kidde Global Solutions si riserva il diritto di modificare le specifiche del prodotto senza preavviso. Per avere informazioni sempre aggiornate, visita it.firesecurityproducts.com online o contatta il tuo riferimento commerciale.

Last updated on 12 November 2026 - 18:57