KIDDE™ COMMERCIAL

# ZX832-3P

**ZP7 Series Addressable Multisensor (Optical/heat)**



# ZX832-3P

## ZP7 Series Addressable Multisensor (Optical/heat)

## Specifiche tecniche

### General

| | |
|---|---|
| Addressing method | Mikroprzełączniki |

### Electrical

| | |
|---|---|
| Power supply type | Zasilanie pętlą |

### Physical

| | |
|---|---|
| Colour | Biel sygnałowa (RAL 9003) |
| Mounting type | Montaż na podstawie, Loftmontering, Forsænket montering |
| Material (body) | Støbt ABS |

### Environmental

| | |
|---|---|
| Vandal proof | No |
| Environment | Indendør |

### Regulatory

| | |
|---|---|
| Compliancy | CE, REACH, RoHS 3, WEEE |
| Certification | CPR |

### Prodotti compatibili

| Categoria | Riferimento | Descrizione |
|---|---|---|
| Detection device | 11510-ZT | ZPL1-1 ADD.LABEL 1001-1127 |
| Detection device | 11520 | Zpl1-2 Add.Label 2001-2127 |
| Detection device | 11530-ZT | ZPL1-3 ADD.LABEL 3001-3127 |
| Detection device | 11540-ZT | ZPL1-4 ADD.LABEL 4001-4127 |
| Detection device | ZP7-IB2-P | Ziton series point detector base with isolator |
| Detection device | ZP7-RB1-P | Recess Mount Detector Base (Polar White) |
| Detection device | ZP7-SB1-P | Surface Mount Detector Base (Polar White) |
| Notification device | 122301 | Z-RL3 Remote LED w/ "Fire" Text, Square |
| Notification device | Z-RL4 | Remote LED Indicator - Square |

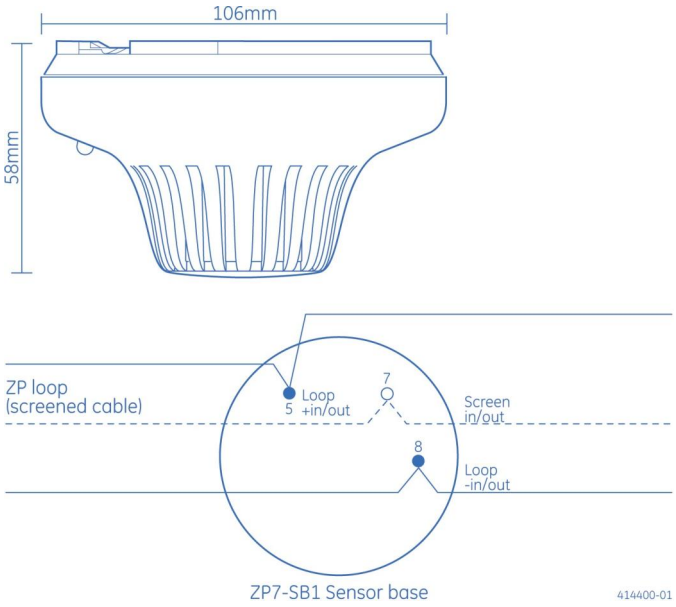


In quanto azienda in continua innovazione, Kidde Global Solutions si riserva il diritto di modificare le specifiche del prodotto senza preavviso. Per avere informazioni sempre aggiornate, visita it.firesecurityproducts.com online o contatta il tuo riferimento commerciale.

Last updated on 12 November 2026 - 18:57