KE-DBA-IPW

Intelligent addressable base accessory - weatherproof base (white)

General

The innovative Excellence range of intelligent addressable devices offers advanced features for reliability and peace of mind. Coupled with features for ease of installation and maintenance on new fire detection systems, it's a perfect match for exceptional overall performance.

The KE-DBA-IPW is an Excellence series, surface mount base accessory. It allows loop cabling to be installed in wet environments by allowing the use of cable glands to seal the cable entry into the base from water ingress via the cables. Four entry points are provided on the wall of the base to accommodate side entry glands. Rear cable entry into the base is also available with two similar cable gland knockouts.

Installation

The conduit entry points are conveniently supplied with breakouts and drill locations to facilitate either installation method.

The standard Excellence series detector base fits snugly inside the fixture, completing the installation with the same feature set as for standard surface mount installation, including address tag mounting ability in two locations, head locking to avoid unauthorised detector removal, and device orientation features for quick, easy and secure detector placement.



Details

- Dual rear cable entry with gland support and ample space for cables
- Cable gland support to prevent water ingress on 4 sides
- Drill location support for cable entry makes installation easy
- External screw fixtures reduces risk of water ingress
- Dual address tag locations avoids alignment to make tags visible
- Supports standard Excellence series bases without feature loss, all base features remain usable
- Supports access to the selectable detector locking mechanism that protects against unauthorized detector removal

KE-DBA-IPW

Intelligent addressable base accessory - weatherproof base (white)

Technical specifications

General

Compatibility	Excellence series bases

Physical

Physical dimensions	104 x 57 mm (Ø x D)
Net weight	165 g
Colour	Biały (RAL 9016)
Mounting type	Loftmontering
Cable entries	6 (2 off rear, 4 off side 25 mm (Ø))
Material (body)	Støbt ABS

Environmental

Vandal proof	No
Operating temperature	-30 to +85°C
Relative humidity	20 to 95% noncondensing
Environment	Indendør

Regulatory

Compliancy	CE, REACH, RoHS 3, WEEE
Certification	CE

Compatible products

Category	Reference	Description
Detection device	KE-DB3010W	Excellence series intelligent device accessory - standard base
Detection device	KE-DBA-TAGW	Intelligent addressable base accessory - address tag (white), supplied in packs of 10

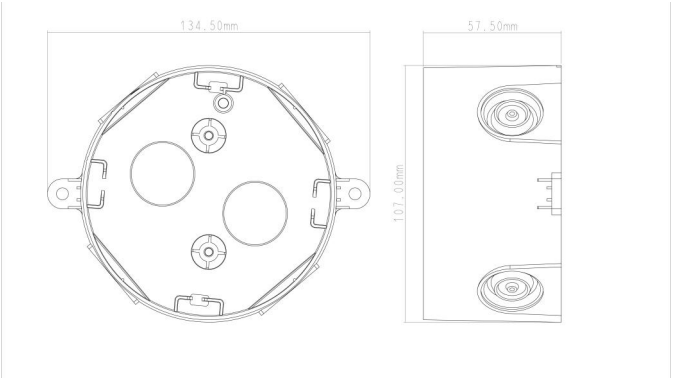

KIDDE COMMERCIAL

As a company of innovation, Kidde Global Solutions reserves the right to change product specifications without notice. For the latest product specifications, visit firesecurityproducts.com online or contact your sales representative.

Last updated on 2 June 2026 - 16:04