TVD-CB9

TruVision Cup Base for S7 outdoor dome camera

Overview

The TVD-CB9 cup base can be used in combination with mounting brackets TVD-SNB, TVD-PPB and TVD-CBW.

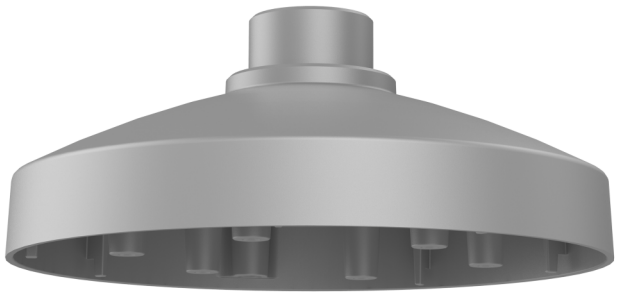

Details

- Compatible with camera brackets TVD-SNB, TVD-PPB, TVD-CBW
- For use with S7 outdoor dome cameras TVD-5715, TVD-5716, TVD-5717, TVD-5718, TVD-5719, TVD-5720, TVD-5721

TVD-CB9

TruVision Cup Base for S7 outdoor dome camera

Technical specifications

General

Bracket type	Kamera
Support type	TruVision Mini Kuppeln
Bracket mounting part	Glocke
Mount type	Hängende Montage, Wandmontage

Physical

Physical dimensions	Ø 155 mm Ø 6.1 in.
Net weight	230 g 0.50 lb.
Colour	Grau (Pantone 428c)
Material	Aluminium

Environmental

Environment	Drinnen, Draussen

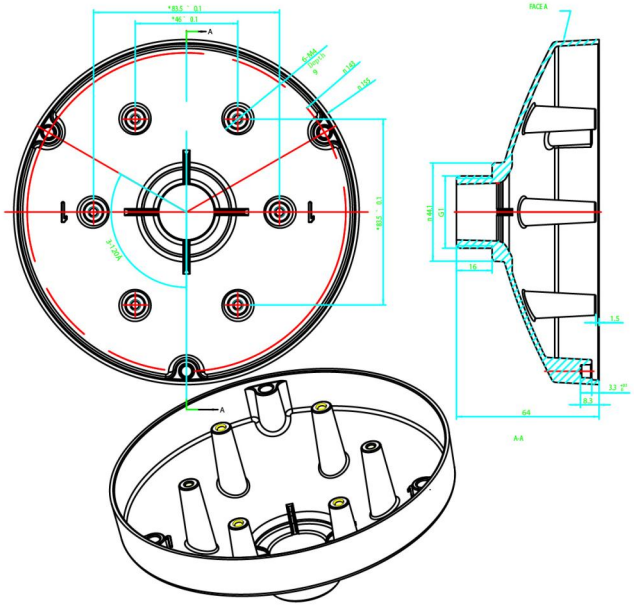

As a company of innovation, Kidde Global Solutions reserves the right to change product specifications without notice. For the latest product specifications, visit firesecurityproducts.com online or contact your sales representative.

Last updated on 13 August 2026 - 19:46