EST-S206B

Altifalante de Tecto

Overview

Ceiling mounted fire alarm EST-S206B loudspeaker is designed for operations at high acoustic levels and the highest reduction in power supply. Actual wide band high efficiency ensures the best understanding of verbal messages. Its parameters have been carefully selected to comply with suspended ceiling applications, both at standard and considerably elevated ceiling-to-floor distance.

Thanks to the most advanced technologies EST-S206B loudspeaker combines excellent acoustic parameters and high aesthetics with resistance to mechanical damages. It is distinguished by easy and quick installation.

Quality standards and audio characteristics have been confirmed through multiple tests and trials employing such facilities as e.g. echo-proof chamber, resistance and integrity testing equipment.

The EST-S206B loudspeaker ensure a balanced sound which is extremely important in emission of highly understandable speech.

The EST-S206B loudspeaker is noticeable thanks to its elegant looks. The loudspeaker part which becomes visible after the installation is covered by a common and aesthetic white paint coat (RAL 9003) – optionally available other colours (RAL palette).

EST-S206B is equipped with a standardized fire dome made of soft steel and supplied with two cable penetrations with rubber glands. Special jig for sling assembling facilitates quick installation. Ceramic blocks and fireproof wiring coupled with temperature limit fuse are located inside fire dome.

The individual power rating is selected by means of connection with applicable transformer branch.

EST-S206B loudspeaker equipped with fire dome and thermal protections entirely comply with EN 54-24 Standards. In order to ensure 100% consistency with the highest quality standards, we test our loudspeaker following the most meticulous procedures that warrant high parameters of sound emission, safety, and reliability.

In spite of the fact our loudspeaker is designed for the highest reliability under fire conditions, their acoustic parameters and attractive low prices make them successful in any and all public address systems.



Detalhes

- Conformidade com a EN 54-24
- Certificado de Conformidade: 1438-CPR-0671
- Conformidade com a norma BS5839-8 (Protecção térmica)
- O mais alto nível de compreensão da comunicação verbal
- Design Elegante
- Transformador de 6 W que permite uma selecção precisa da potência de saída dos altifalantes
- 100% de protecção da linha contra quebras e curto-circuitos

EST-S206B
Altifalante de Tecto

Especificações técnicas

Physical

Physical dimensions	199 x 115 mm (Ø x H)
Net weight	1.1 kg
Colour	Blanco (RAL 9003)
Mounting type	Abrazadera de resorte
Mounting position	Techo
Housing material	Stahl

Environmental

IP rating	32C

Regulatory

Standards	EN54-24

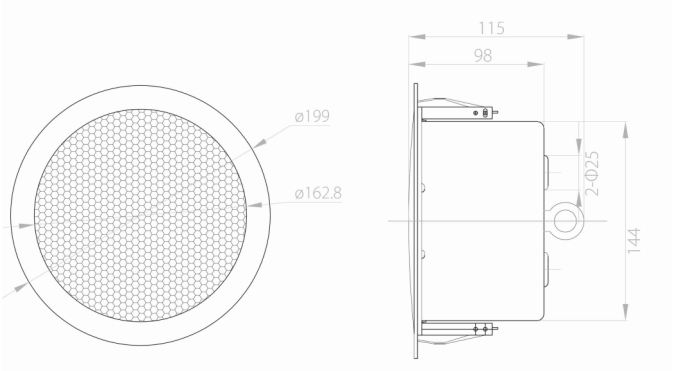

EDWARDS
Built for Resilience

Como empresa de inovação, a Kidde Global Solutions reserva o direito de alterar as especificações do produto sem aviso prévio. Para obter informações sobre as especificações mais recentes do produto, visite pt.firesecurityproducts.com online ou contate o departamento comercial.

Last updated on 12 November 2026 - 18:57