KIDDE™ COMMERCIAL

# ZX832-3P

**ZP7 Series Addressable Multisensor (Optical/heat)**



# ZX832-3P

## ZP7 Series Addressable Multisensor (Optical/heat)

## Specifiche tecniche

### General

| | |
|---|---|
| Addressing method | Interruptores DIP |

### Electrical

| | |
|---|---|
| Power supply type | Alimentado por bucle |

### Physical

| | |
|---|---|
| Colour | Señal blanca (RAL 9003) |
| Mounting type | Montaje sobre base, Loftmontering, Forsænket montering |
| Material (body) | Støbt ABS |

### Environmental

| | |
|---|---|
| Vandal proof | No |
| Environment | Indendør |

### Regulatory

| | |
|---|---|
| Compliancy | CE, REACH, RoHS 3, WEEE |
| Certification | CPR |

### Prodotti compatibili

| Categoria | Riferimento | Descrizione |
|---|---|---|
| Detection device | 11510-ZT | ZPL1-1 ADD.LABEL 1001-1127 |
| Detection device | 11520 | Zpl1-2 Add.Label 2001-2127 |
| Detection device | 11530-ZT | ZPL1-3 ADD.LABEL 3001-3127 |
| Detection device | 11540-ZT | ZPL1-4 ADD.LABEL 4001-4127 |
| Detection device | ZP7-IB2-P | Ziton series point detector base with isolator |
| Detection device | ZP7-RB1-P | Recess Mount Detector Base (Polar White) |
| Detection device | ZP7-SB1-P | Surface Mount Detector Base (Polar White) |
| Notification device | 122301 | Z-RL3 Remote LED w/ "Fire" Text, Square |
| Notification device | Z-RL4 | Remote LED Indicator - Square |

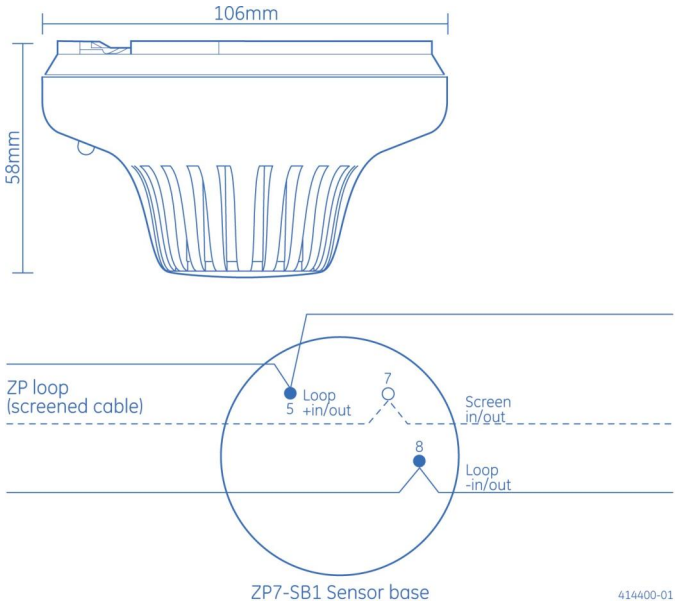


KIDDE COMMERCIAL

In quanto azienda in continua innovazione, Kidde Global Solutions si riserva il diritto di modificare le specifiche del prodotto senza preavviso. Per avere informazioni sempre aggiornate, visita it.firesecurityproducts.com online o contatta il tuo riferimento commerciale.

Last updated on 12 November 2026 - 18:57