KIDDE™ COMMERCIAL

# ZX832-3B

**Addressable Multisensor (Optica/heat)**



# ZX832-3B

## Addressable Multisensor (Optica/heat)

## Tekniske specifikationer

### General

| | |
|---|---|
| Addressing method | Interruptores DIP |

### Electrical

| | |
|---|---|
| Power supply type | Alimentado por bucle |

### Detection

| | |
|---|---|
| Monitoring | Alarm threshold, Continuously self-checking, Fault |

### Physical

| | |
|---|---|
| Colour | Negro (RAL 9005) |
| Mounting type | Montaje sobre base, Loftmontering, Forsænket montering |
| Material (body) | Støbt ABS |

### Environmental

| | |
|---|---|
| Vandal proof | No |
| Environment | Indendør |

### Regulatory

| | |
|---|---|
| Compliancy | CE, REACH, RoHS 3, WEEE |
| Certification | CPR |

### Kompatible produkter

| Kategori | Reference | Beskrivelse |
|---|---|---|
| Detection device | 11510-ZT | ZPL1-1 ADD.LABEL 1001-1127 |
| Detection device | 11520 | Zpl1-2 Add.Label 2001-2127 |
| Detection device | 11530-ZT | ZPL1-3 ADD.LABEL 3001-3127 |
| Detection device | 11540-ZT | ZPL1-4 ADD.LABEL 4001-4127 |
| Detection device | 84301/BLK | ZP7-SB1 Surface Mount Detector Base (Black) |
| Notification device | 122301 | Z-RL3 Remote LED w/ "Fire" Text, Square |
| Notification device | Z-RL4 | Remote LED Indicator - Square |

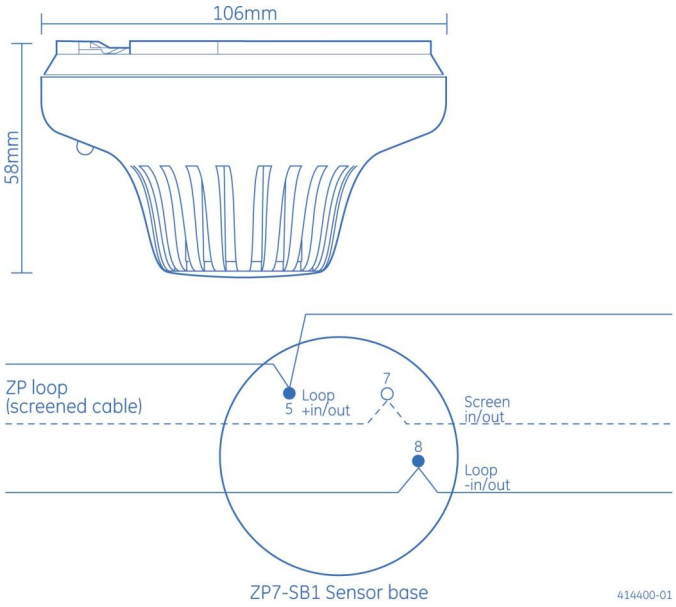


Kidde Global Solutions er et innovativt selskab og forbeholder sig ret til at ændre produktspecifikationer uden varsel. De nyeste produktspecifikationer kan du finde på dk.firesecurityproducts.com eller ved at kontakte din salgsrepræsentant hos.

Last updated on 12 November 2026 - 18:57