KIDDE™ COMMERCIAL

ZP732-2P

ZP7 Series Addressable Dual Detector (Optical & Heat) , Polar White



ZP732-2P

ZP7 Series Addressable Dual Detector (Optical & Heat) , Polar White

Technische specificaties

General

Addressing method	Dip-Schalter

Detection

Monitoring	Device type, Open circuit, Presence, Short circuit

Physical

Colour	Polarweiß
Mounting type	Montage auf Sockel
Material (body)	Geformtes ABS

Environmental

Vandal proof	No
Environment	Drinnen

Regulatory

Compliancy	CE, REACH, RoHS 2, WEEE
Certification	CPR

Compatibele producten

Categorie	Referentie	Beschrijving
Detection device	11510-ZT	ZPL1-1 ADD.LABEL 1001-1127
Detection device	11520	Zpl1-2 Add.Label 2001-2127
Detection device	11530-ZT	ZPL1-3 ADD.LABEL 3001-3127
Detection device	11540-ZT	ZPL1-4 ADD.LABEL 4001-4127
Detection device	ZP7-IB2-P	Ziton series point detector base with isolator
Detection device	ZP7-RB1-P	Recess Mount Detector Base (Polar White)
Detection device	ZP7-SB1-P	Surface Mount Detector Base (Polar White)
Notification device	122301	Z-RL3 Remote LED w/ "Fire" Text, Square
Notification device	Z-RL4	Remote LED Indicator - Square

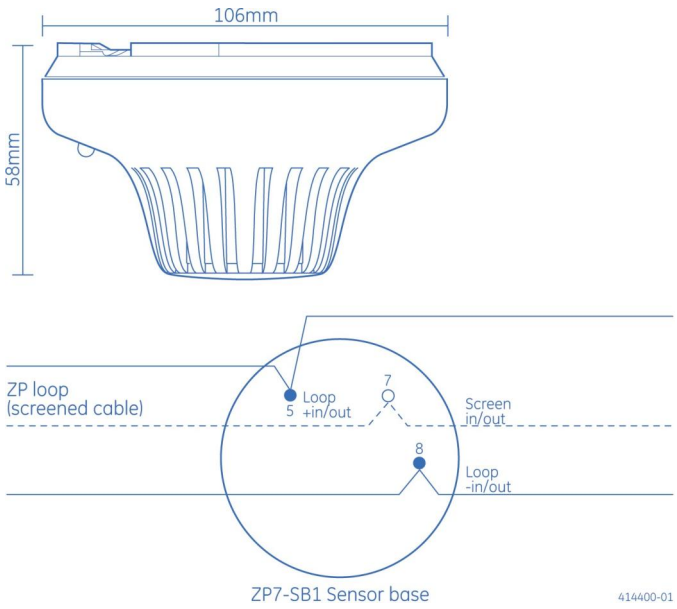

KIDDE COMMERCIAL

Als een bedrijf van innovatie behoudt Kidde Global Solutions zich het recht voor productspecificaties zonder kennisgeving te wijzigen. Ga voor de nieuwste productspecificaties online naar be.firesecurityproducts.com of neem contact op met uw verkoopvertegenwoordiger.

Last updated on 12 November 2026 - 18:57