ZP732-2P

Ziton series Addressable Dual Detector (Optical & Heat), Polar White

Wide response range

Designed to provide the earliest response to a wide range of fire types, the ZP732-2P POLAR WHITE dual detector combines optical smoke sensing and thermal monitoring to provide an accurate warning of fire. Individual software monitoring of each element measures actual smoke levels, in addition to temperature rates of rise. Smoke sensing can be isolated for areas where ambient smoke may exist at certain times of the day, or used on a day night basis in premises where heat only is required whilst the building is occupied.

Temperature response meets the requirements of EN54 Part 5 (Class A1 and A2), with smoke sensitivity complying with EN54 Part 7 and test procedure CEA4021. Several international approval bodies approved this detector.

Automatic self test

The smoke element is regularly recalibrated by the panel for contamination and constant sensitivity. Self test and selectable alarm verification are all provided automatically by the ZP control panel software.

Up to 127 sensing devices may be connected to each of the control panel loops. All loop devices incorporate switch settings enabling them to be assigned a unique address, which is polled by the panel every two seconds.

Whilst effective in operation, the ZP732-2 is unobtrusive when installed. The low profile moulding makes the unit ideal for both commercial and industrial interiors. A red LED indicator, situated on the sensor moulding, flashes to indicate when the unit is in alarm.

Locking base option

For ease of removal these detectors plug into a range of base units by a simple twist and lock action. A site selectable option is provided to lock the sensor into its base. Once applied the unit can only be removed by means of a special tool.

Space for address labels is provided on detector and base mouldings, ensuring that units are replaced in their correct location. The address numbers can be identified from floor level.



Details

- Senses both smoke and heat
- Heat only facility
- Smoke element complies with EN54 Part 7 and CEA4021
- Heat element complies with EN54 Part 5 Class A1 and A2
- Analogue sensing - reduces false and unwanted alarms
- Addressable - system knows the status and location of every detector

ZP732-2P

Ziton series Addressable Dual Detector (Optical & Heat), Polar White

Technical specifications

General

Status indication	Alarm LED (red)
Compatibility	ZP7 Series Systems
Connectivity	2 Core loop or spur & remote indicator
Addressing method	Dip-Schalter
Addressing method	7 way dipswitch

Electrical

Operating voltage	19.5 to 20.5 V (Loop powered) 4 V (Max. line loss)
Current consumption	<600 µA (Quiescent) <700 µA (Active)

Detection

Detection principle	Photo electric light scatter or heat
Monitoring	Device type, Open circuit, Presence, Short circuit
Coverage area	100 m² (Optical) 50 m² (Heat)

Output

Output quantity	1
Remote alarm output	Yes

Physical

Physical dimensions	106 x 58 mm (Ø x H)
Net weight	105 g (excluding base)
Colour	Polarweiß
Mounting type	Montage auf Sockel
Material (body)	Geformtes ABS
Mounting	Plugs into surface or semi recessed base

Environmental

Vandal proof	No
Operating temperature	-10 to +85°C
Storage temperature	-20 to +70°C
Relative humidity	20 to 95% noncondensing
Environment	Drinnen
IP rating	IP32

Regulatory

Compliancy	CE, REACH, RoHS 2, WEEE
Certification	CPR
Standards	EN54-5, EN54-7
Environmental	EEC89/336

Compatible products

Category	Reference	Description
Detection device	11510-ZT	ZPL1-1 address label 1001-1127
Detection device	11520	ZPL1-2 Add.Label 2001-2127
Detection device	11530-ZT	ZPL1-3 address label 3001-3127
Detection device	11540-ZT	ZPL1-4 address label 4001-4127
Detection device	ZP7-IB2-P	Ziton series point detector base with isolator
Detection device	ZP7-RB1-P	ZP7 Series point detector recess mount base
Detection device	ZP7-SB1-P	ZP7 Series point detector base
Notification device	122301	Z-RL3 Remote LED w/ "Fire" Text, Square
Notification device	Z-RL4	Remote LED Indicator - Square

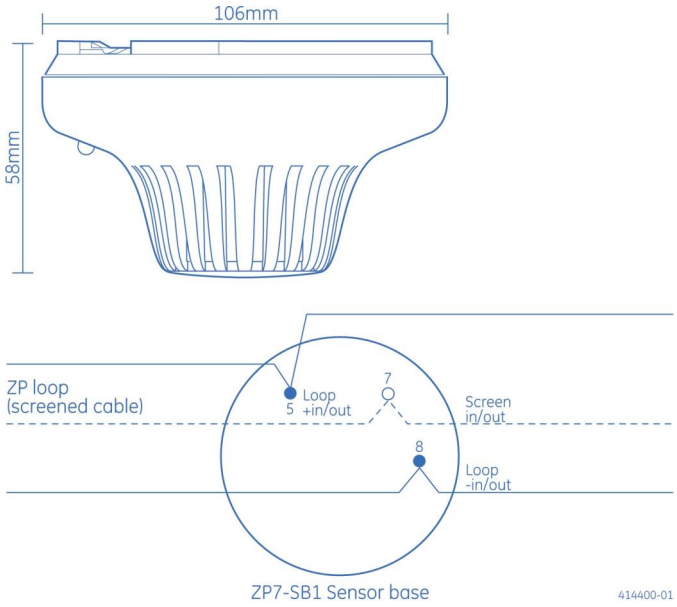

KIDDE COMMERCIAL

As a company of innovation, Kidde Global Solutions reserves the right to change product specifications without notice. For the latest product specifications, visit firesecurityproducts.com online or contact your sales representative.

Last updated on 14 October 2026 - 17:04